Full CAD Package

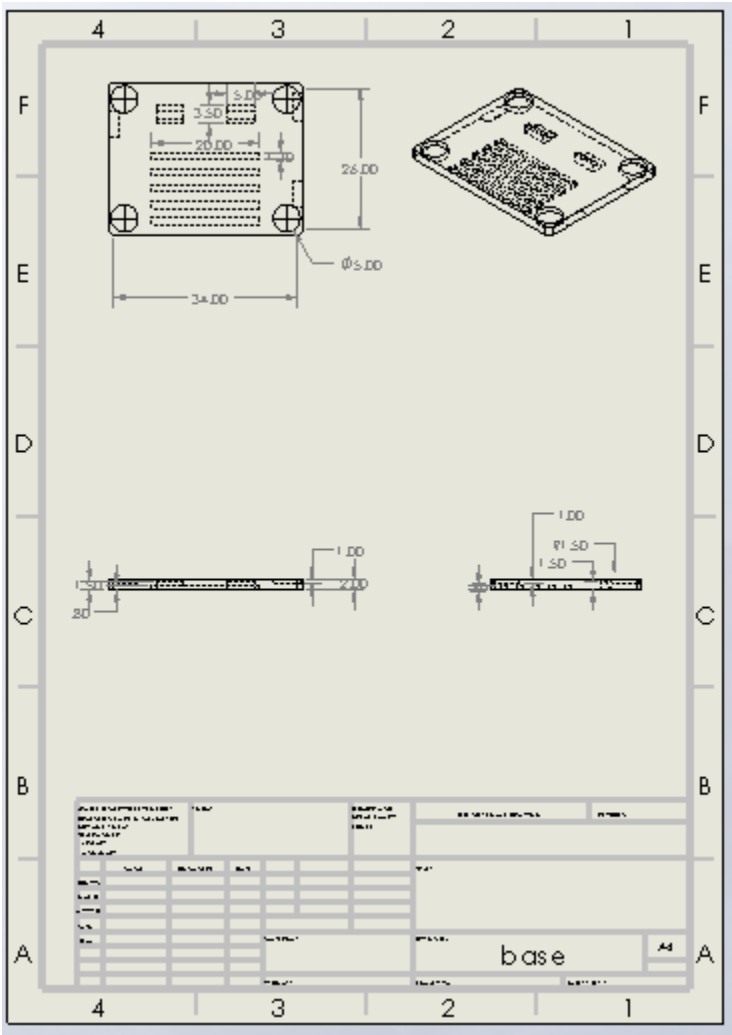

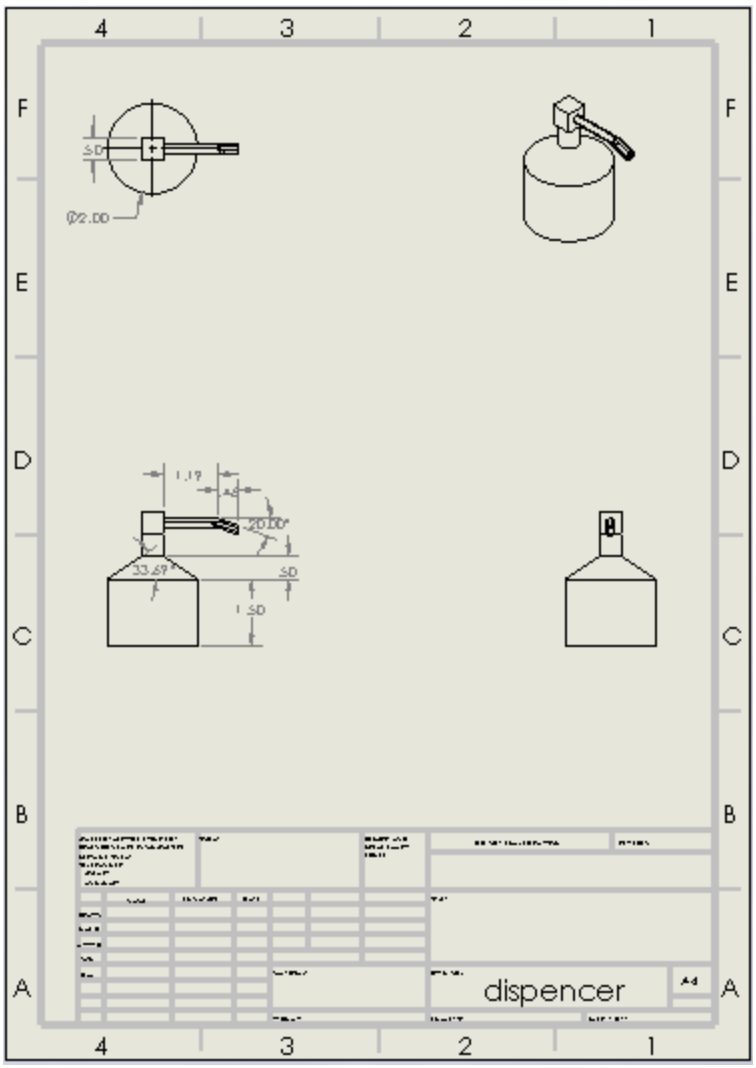
.50
Ø2.00
1.19
.45
20.00°
33.69°
.50
1.50
dispencer
A4

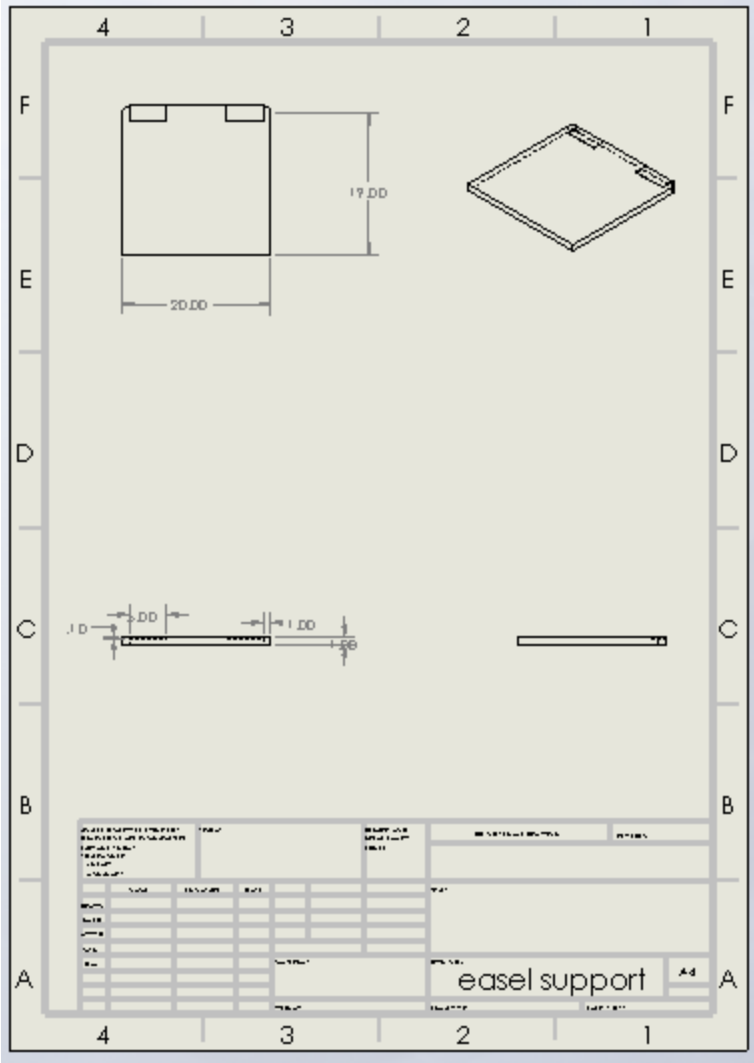
19.00
20.00
.10
.00
1.00
easel support
A4

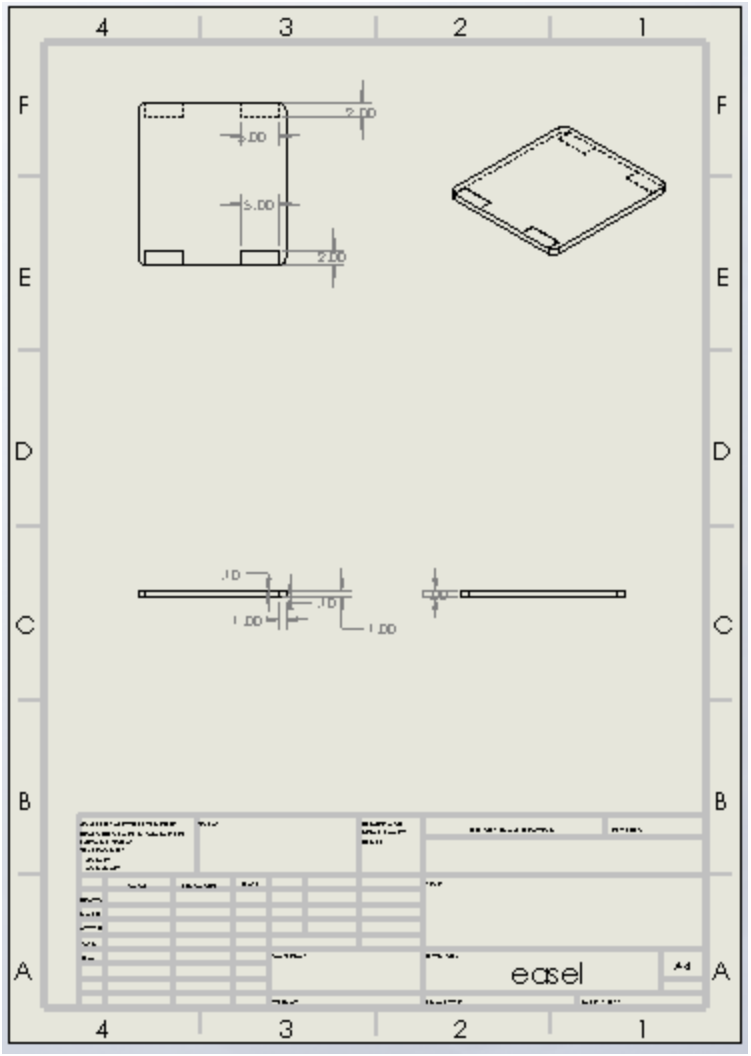
2.00
5.00
5.00
2.00
.10
.10
1.00
1.00
easel
A4

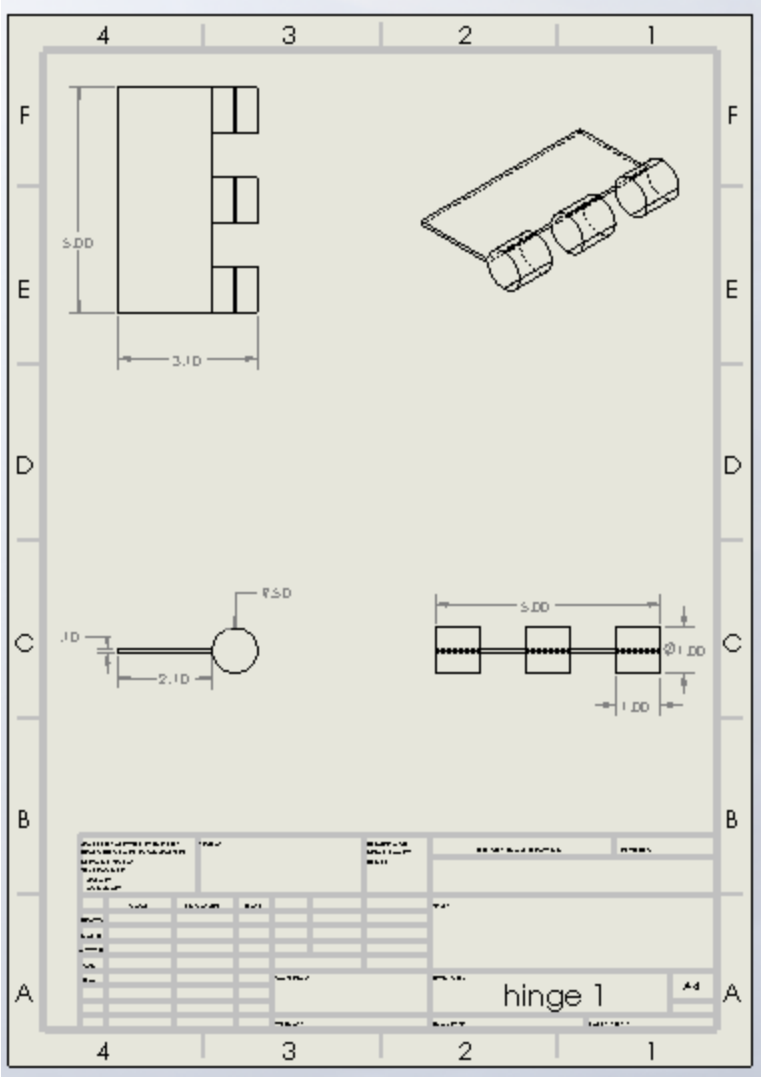
5.00
3.10
.10
2.10
5.00
Ø1.00
1.00
hinge 1
A4

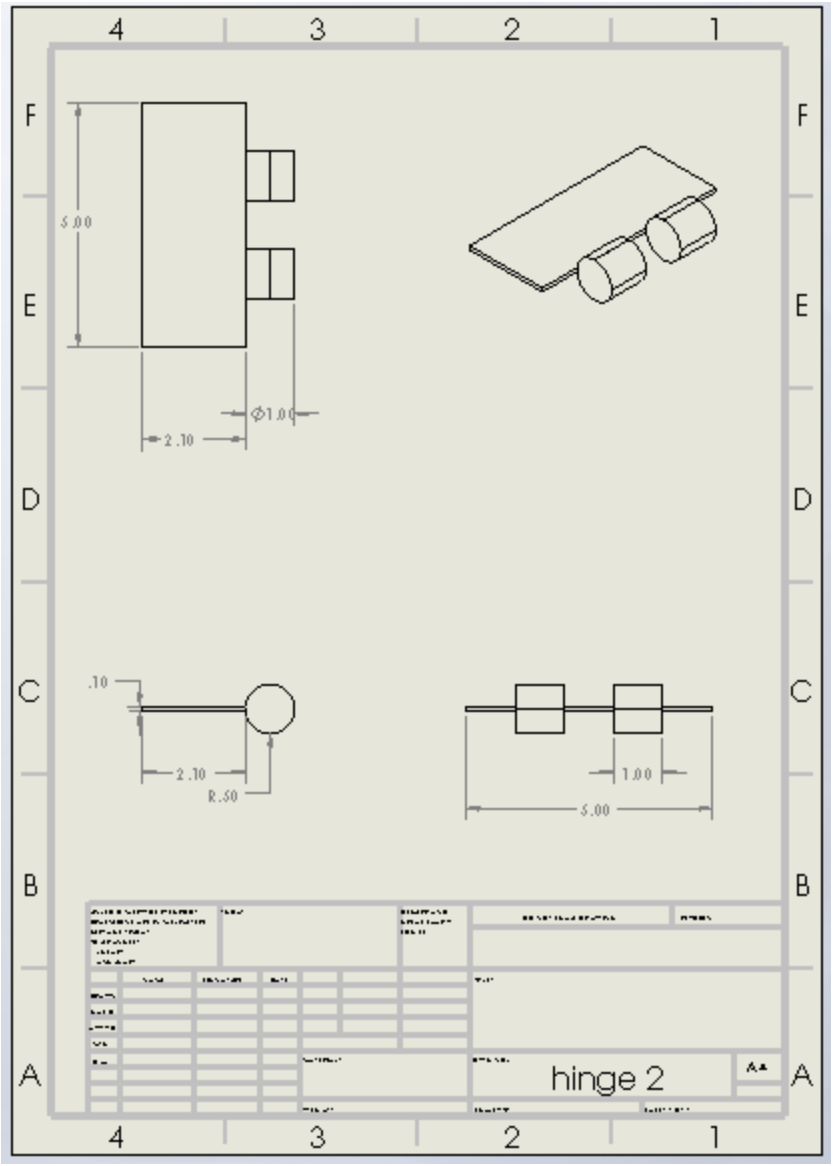
5.00
Ø1.00
2.10
.10
2.10
R.50
1.00
5.00
hinge 2

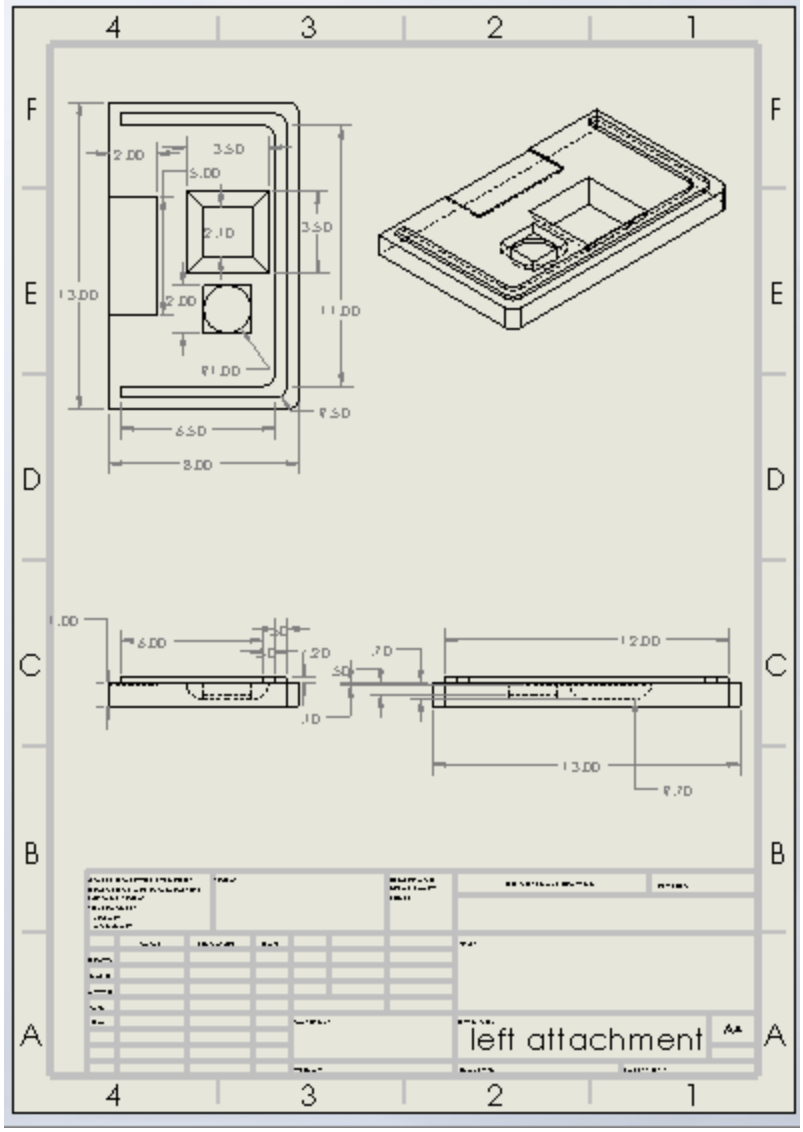
2.00
3.50
5.00
2.10
3.50
13.00
2.00
11.00
R1.00
R.50
6.50
8.00
1.00
6.00
.50
.50
.20
.10
.70
.50
12.00
13.00
R.70
left attachment

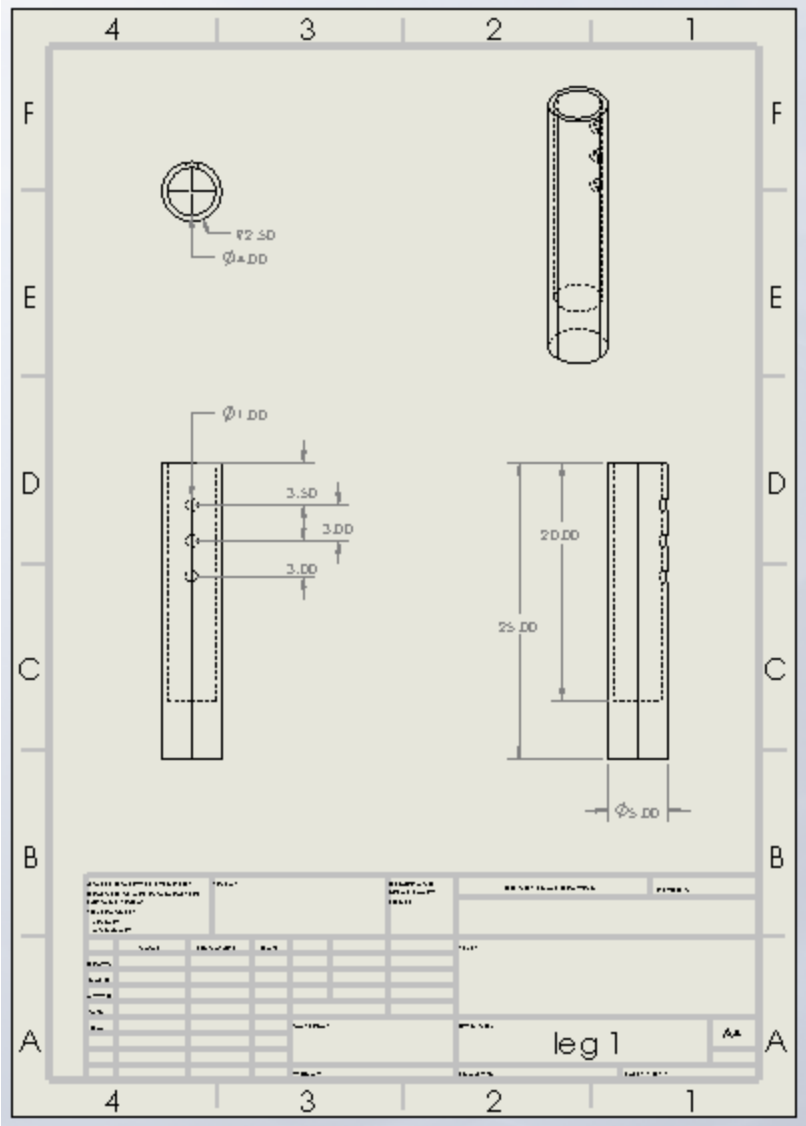
R2.50
Ø4.00
Ø1.00
3.50
3.00
3.00
20.00
25.00
Ø5.00
leg 1

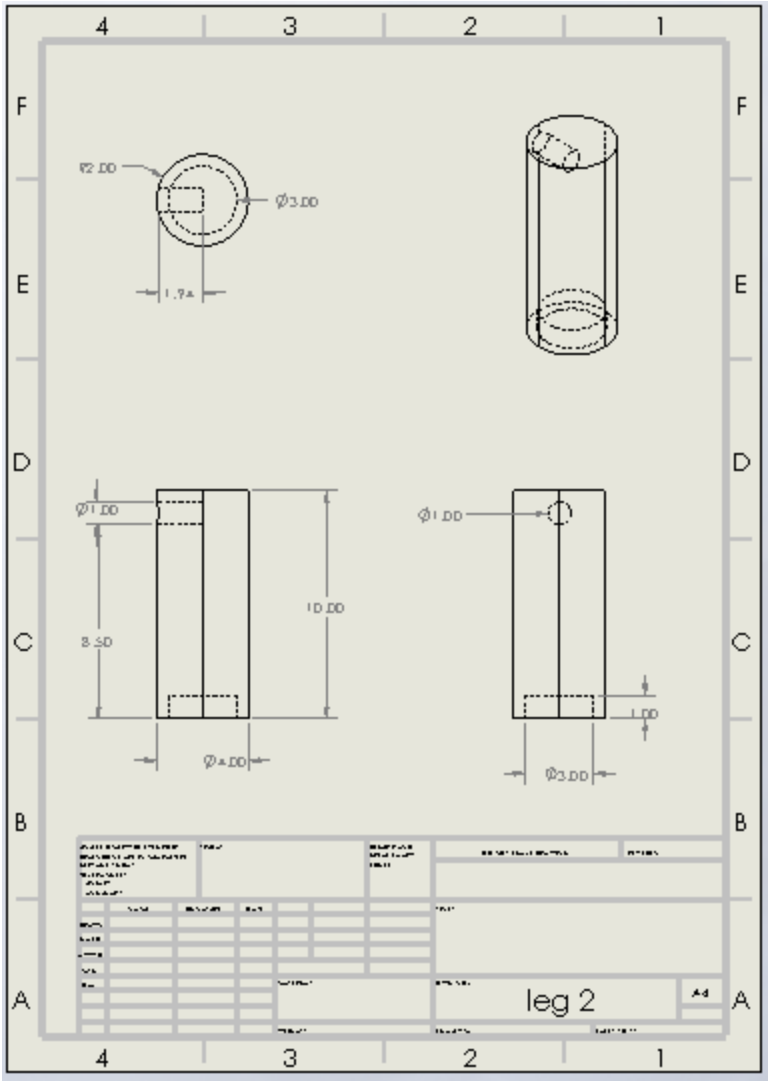
R2.00
Ø3.00
1.75
Ø1.00
10.00
8.50
Ø4.00
Ø1.00
1.00
Ø3.00
leg 2
A4

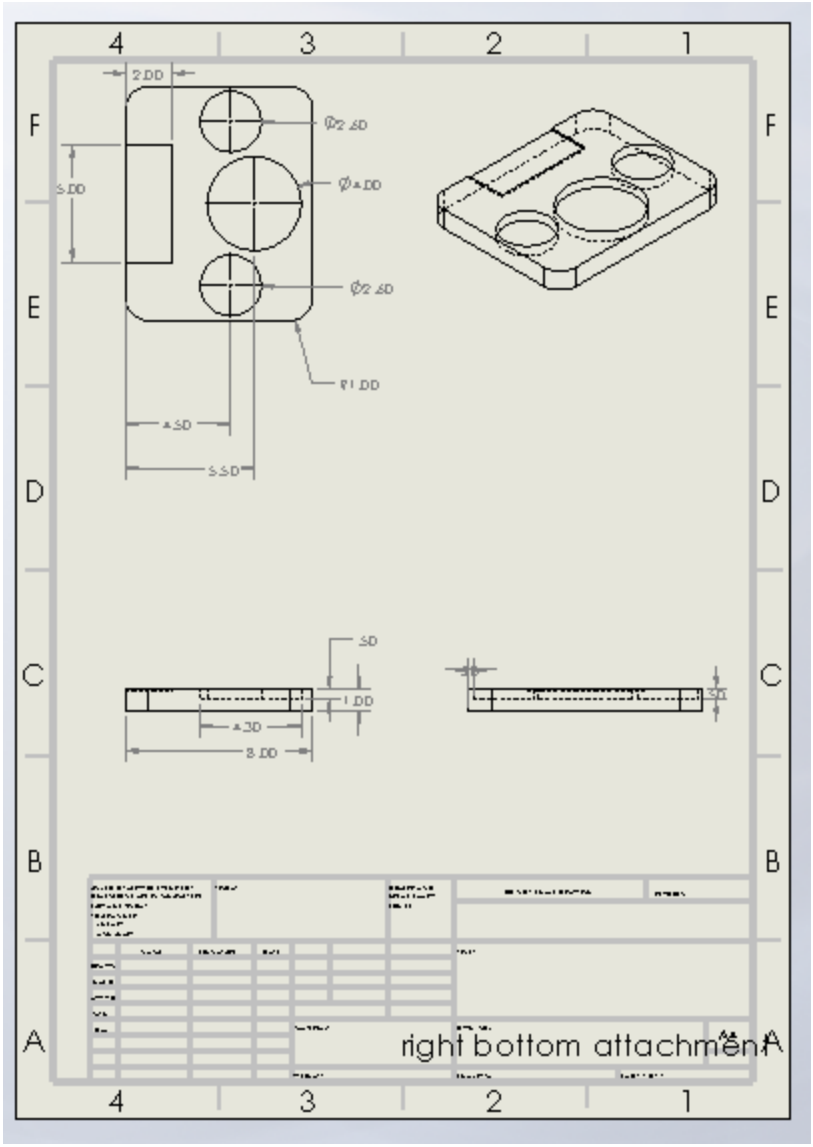
2.00
Φ2.50
Φ4.00
Φ2.50
5.00
R1.00
4.50
5.50
.50
1.00
4.30
8.00
.50
right bottom attachment

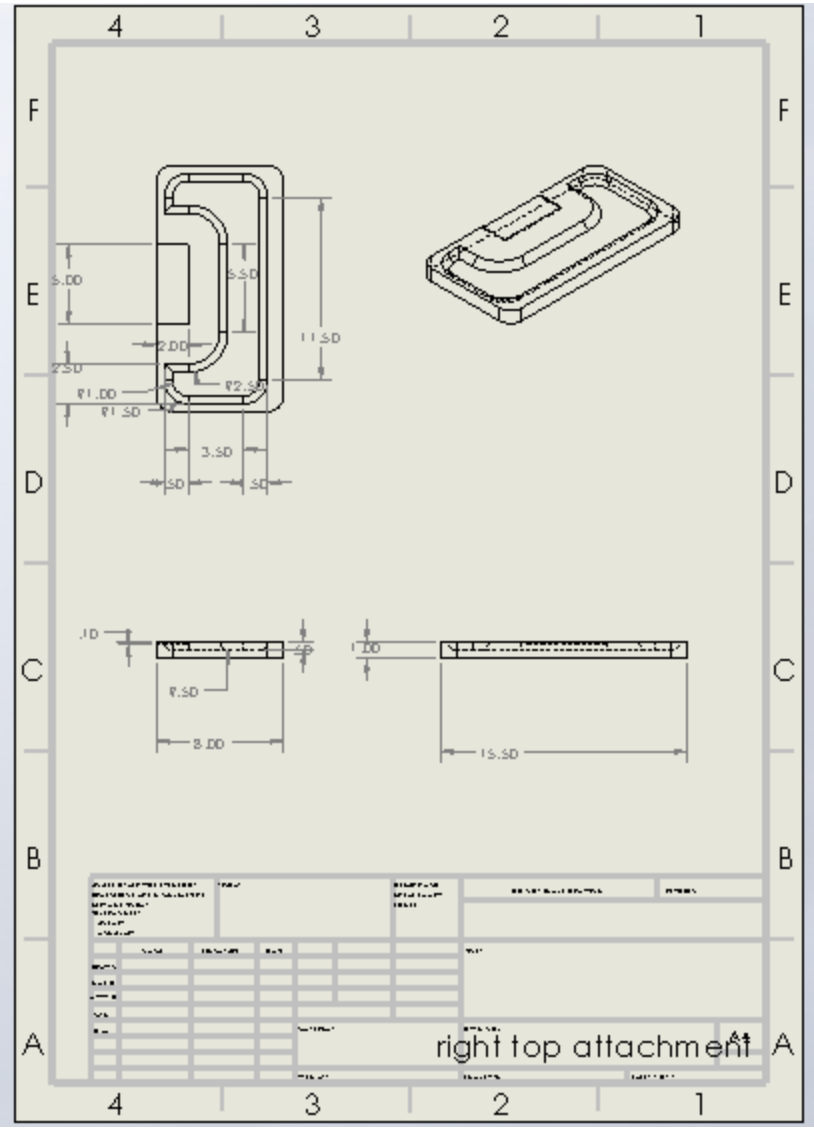
5.00
5.50
11.50
2.00
2.50
R1.00
R1.50
R2.50
3.50
.50
.50
.10
.50
1.00
8.50
8.00
15.50
right top attachment

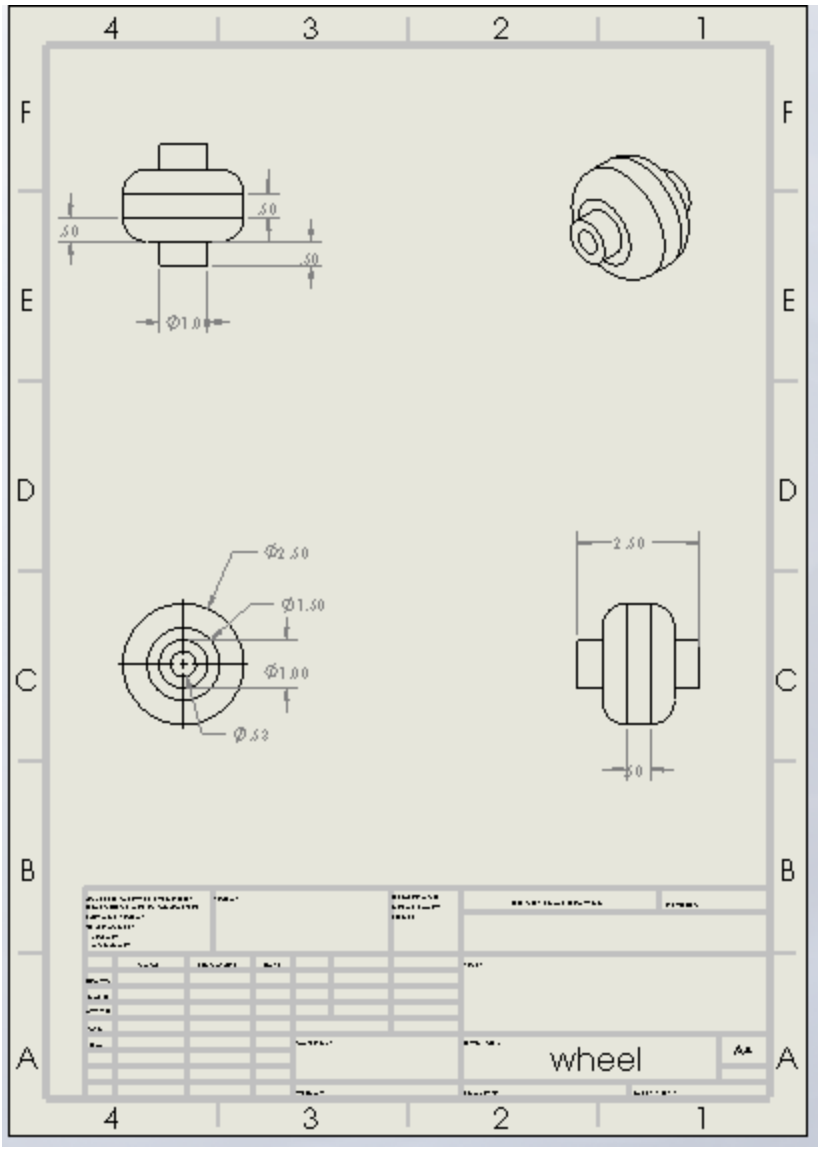
.50
.50
.50
.50
Ø1.00
Ø2.50
Ø1.50
Ø1.00
Ø.50
2.50
.50
wheel

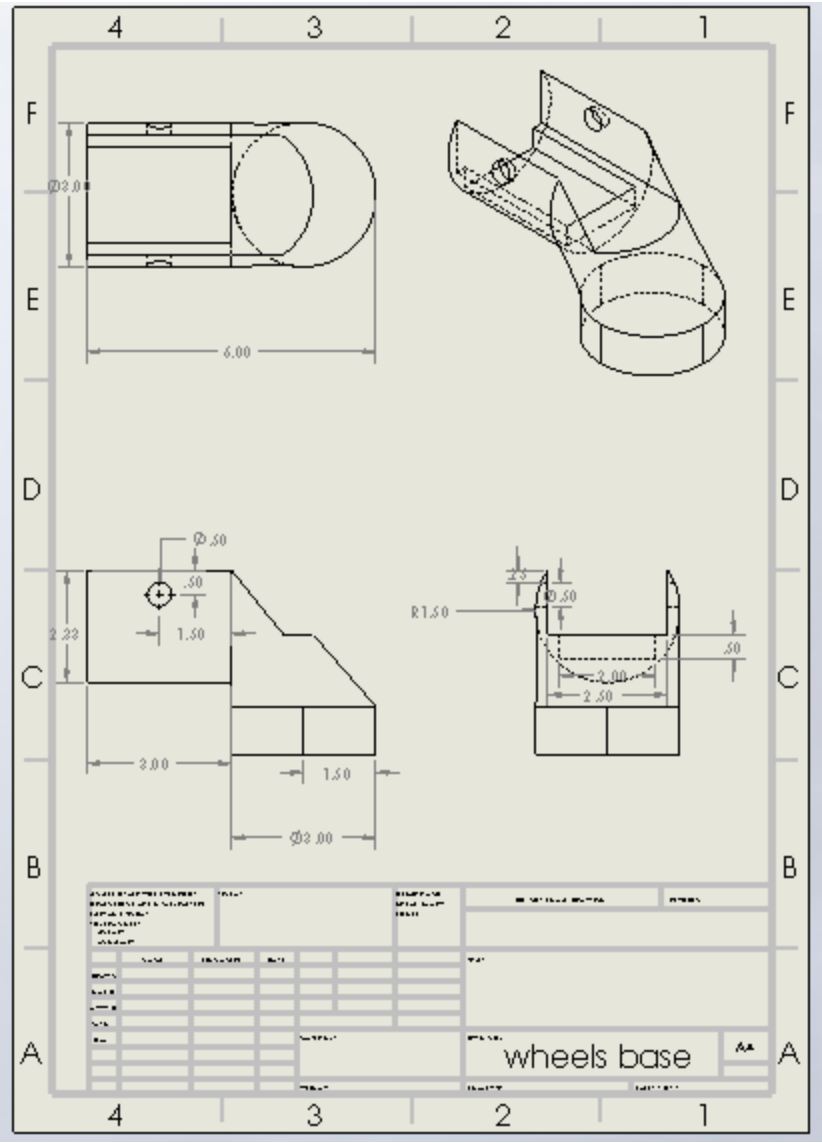
Ø3.00
6.00
Ø.50
.50
1.50
2.25
3.00
1.50
Ø3.00
R1.50
.25
Ø.50
.50
2.00
2.50
wheels base